Success Factors for Machine Connection

The success of the global factory is dependent on the seamless connection of all machines and equipment

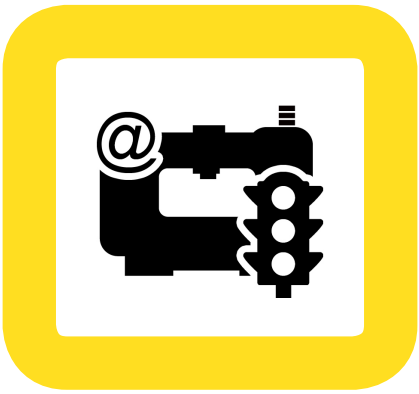

"FORCAM connected two problem machines in just 1 hour and 20 minutes. A competitor was unable to complete the task after several months."

"You cannot improve, what you cannot measure."

The Objective

A modern shop floor can measure and visualize the performance of machines and systems in real time. With this, a transparent factory emerges, where production is virtually mirrored and inaccuracies and wastes can be immediately identified and eliminated. Such a "Cyber-Physical System" can analyze and optimize the performance, availability and quality of the production processes, leading to productivity increases of 20% or more within 12 months or less.

The Challenge

In today's manufacturing facilities, there is a large mix of heterogeneous machines and control types, where signals must be collected, aggregated and evaluated. The solution to this common problem is a centralized system, which can seamlessly "plug and play" with any type of machine CNC controller or PLC.

The Trap

Machine connection and integration capabilities are key differentiators when selecting the right MES technology provider. The experience level and readiness of the technology provider determines the time and costs required to successfully connect any machine. Standardized interfaces to all common machine controls, via direct plug-ins, must be created, otherwise the time required for connecting the machines, is unmanageable. Please be cautioned that in order to normalize machine signal data, some technology vendors rely on additional third-party licenses that may be required for their interfaces to properly function. This can significantly increase project costs and lifetime maintenance.

The Case

At a pilot project initiated by a MES provider, a major German tool manufacturer determined that connections to some of their machines was very time-consuming, costly and in some cases not possible. Even after months of work, some challenging machine control types remained unconnected. The MES provider lacked expertise and the necessary plug-ins.

Solution: In less than one and a half hours, FORCAM consultants were able to reach a major milestone; ensuring that the signals of both machines were now being collected and recorded accurately in the system.

Signals from a variety of machine control types must be centrally recorded and normalized, analyzed and visualized over the web.

The Competence

The technological prerequisite for continuous improvement in productivity is the effective integration of production data. This means a secure and quickly referenced record of large sets of data from different sources, that can be used to analyze and visualize all necessary equipment and production information in real time. The key to this continuous improvement approach is the ability to manage “Big Data” by receiving real time information and utilizing cloud-based systems. The ability to process and present data from machines of different manufacturers, located in multiple sites, and in different languages; can all be achieved using an advanced J2EE architecture with complete web-based capability. A combination of *In-Memory Technology* and *Complex Event Processing* ensures the data is processed at extremely high speeds.

The Practice

A typical manufacturer who has attempted to connect with heterogeneous controls may see a functionally-inadequate shop floor management system, which they have pieced together and grown over decades. Due to the inefficiencies of this outdated practice, a major barrier is faced when attemping to grow or improve such a home-grown solution.

The Solution

FORCAM offers sophisticated and powerful plug-ins for a variety of machine types and control systems.

The integration of machine and production data is made possible in 3 steps:

- Capture Data
- Import Data
- Analyze Data

1. Step: Capture Data

To connect with heterogenious controls, FORCAM uses three methods for machine data acquisition. The selected method for connection depends on the machinery and the desired amount of information to be captured. The machine data connection (MDC) can be fully adopted as there is little room for error; the more data collected automatically, the better the data integrity and the less resources wasted for manual reporting.

Signal Recording for Legacy Controls:

Even machines with legacy controls can be connected to the Cloud. To achieve this, the installation of an “I/O- Ethernet converter” in the control cabinet of the machine is necessary. The required analog signals are output from the machine controller and converted into digital signals that are then output to the network via ethernet. FORCAM connects to legacy controls via a fieldbus controller (I/O-Set).

Signal Recording via Advanced Protocols:

Newer machines come from the manufacturer, equipped with communication processors and standardized communication software. Examples are Heidenhein’s TNC, Siemens RPC or Fanuc FOCAS. With these controls, the data can be read directly from the machine and additional information and functionality can be provided. The collection of machine alarms, transfer of NC programs or queries on the current tool assignment are just a few examples of the various expanded capabilities. Plugins for several providers are available from FORCAM.

If the machine has a serial (RS232) port, a data exchange (DNC) can be completed using a COM server.

Fieldbus Controller
I/O- Ethernet-Converter

Controlling with Server:

With modern machine connections, the data preparation can be completed within the facility. Each machine has an additional computer, usually a PC, which is able to run programs for data preparation, providing consistent data formatting. The data forwarding is now completed via Ethernet. The system is universal, which is important, especially for international companies. IT managers are trained to organize integrated and efficient manufacturing systems, with open communication protocols.

OPC:

OPC (Open Protocol Communication) has emerged as a standard machine interface protocol. OPC is freely configurable and solely regulates how two machines talk to each other (the syntax). Selecting which information needs to be communicated, is managed separately.

MTConnect:

Technologically, MTConnect is comparable with OPC, however it is focused on “Communication with Machine Tools”. This solution has been widely distributed in North America and some industry leaders in Europe, including FORCAM as a technology provider, have begun using this royalty-free standard. MTConnect links systems, applications, and entire factories with each other to provide an integrated overall manufacturing system. MTConnect was introduced by the Association of the U.S. manufacturing industry (AMT - Association for Manufacturing Technology), which also sponsors an MTConnect Institute. (www.mtconnect.org)

MTConnect

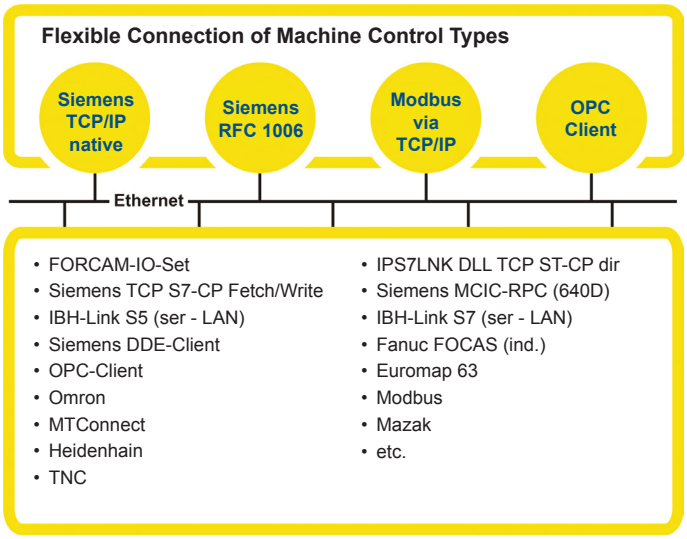

FORCAM offers a seamless integration with all machines, regardless of the manufacturer, control type or age of the machine.

2. Step: Import Data

After all process and measurement data is collected, it is uploaded in the so-called DCU (Data Collection Unit). Various software plug-ins ensure that the above-mentioned and other protocols can be processed. Heterogeneous controllers, depending on machine manufacturer, must have their own programmed plugin, because each controller speaks with its own language. Each of these DCUs can operate up to 100 controllers of different designs simultaneously, without special requirements to the PC hardware. Two DCUs can also be configured, to monitor and replace each other, in the case of a malfunction.

The actual communication with the plant controls take place in the DCUs: plugin modules act as “middleware” between machines and the supervisory FORCAM server, which is responsible for ensuring that the correct data is transmitted efficiently (event-driven difference telegrams).

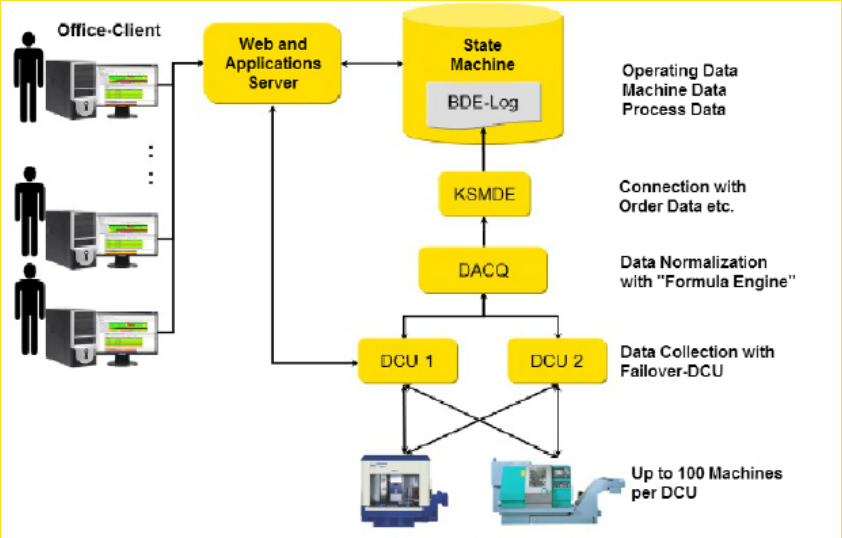

System Architecture for Machine Data Connection using Factory Framework®

3. Step: Interpret Data

The original machine signals are not the only information needed for production control. A logic device is needed, that calculates the desired operating conditions from a plurality of signals and additional information. The operating states of production can be normalized as “Production”, “Reduced Production”, “Idle”, “Machine Problem”, and other states, independent of the type and function of the machine. This information is transferred from the supervisory system to the corporate planning team. The data of heterogeneous machines and equipment can now be compared and used to calculate the metrics (OEE) and visualization of the processes in real time.

FORCAM - MES Technology Leader

FORCAM provides premium global corporations and mid-sized companies an industry-leading technology solution for the Industry 4.0 Smart Factory. Customers include Airbus Group, Audi, BMW, Borg Warner, Daimler, MTU Aero Engines, Hilti, Mann + Hummel, Mahle, MSR Technologies and Weir Minerals. Worldwide, more than 50,000 machines are monitored and optimized by FORCAM’s technology. FORCAM allows organizations to gather information on machinery, equipment and factory performance in real-time from anywhere in the world, on any device and in any language. For real-time mapping of data sets (Big Data), FORCAM is the first technology provider to offer in-memory based technology in conjunction with “complex event processing” (CEP). FORCAM’s fully web-based, cloud-enabled solution has enabled organizations to increase the productivity of machinery and equipment by 20 percent or more, as measured by OEE (Overall Equipment Effectiveness).

FORCAM Inc.
250 Fifth Street
Cincinnati OH 45202

Phone: +1 (513) 878-2780
E-Mail: info@forcam-usa.com

www.forcam.com

FORCAM®
DRIVING PRODUCTIVITY